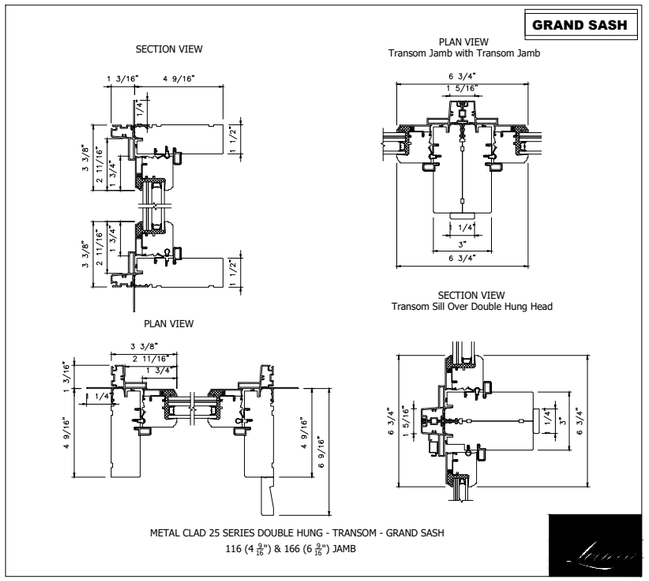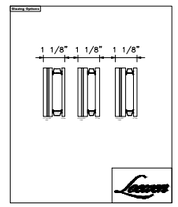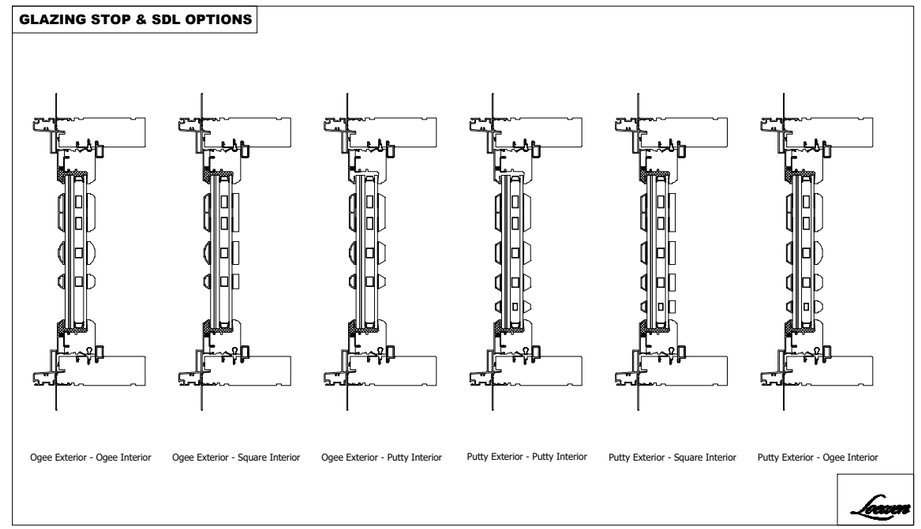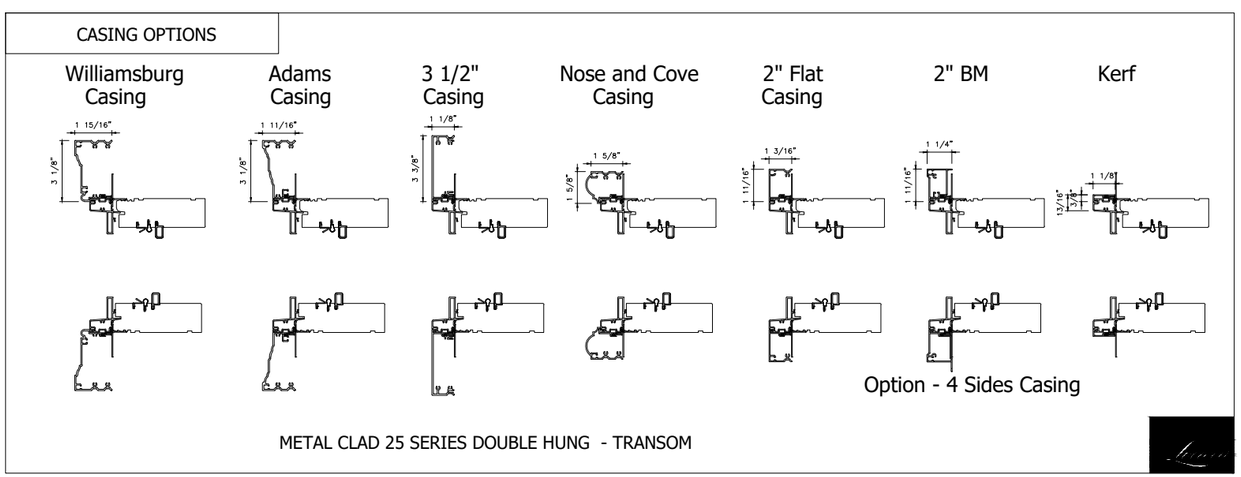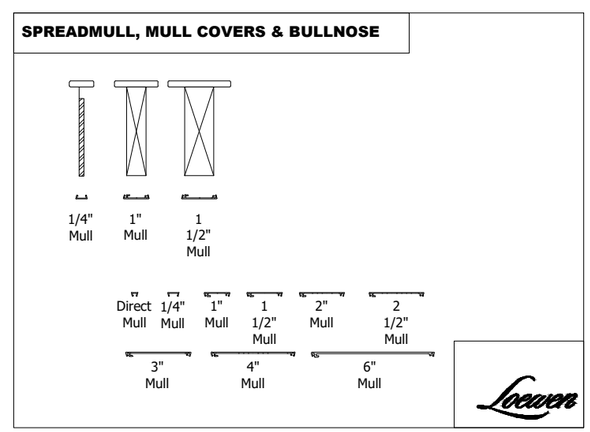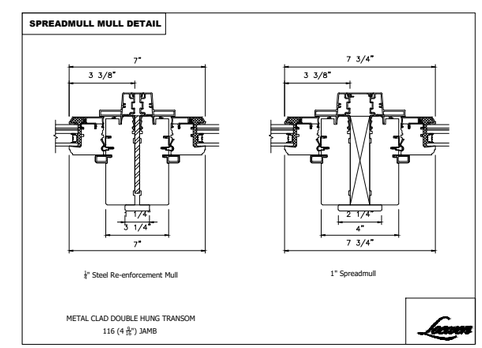1115_Double-Hung-Transom-Impact - Imperial