1112_25Double-Hung-Non-Tilting-NC - Metric

HEAD AND SILL DETAILS

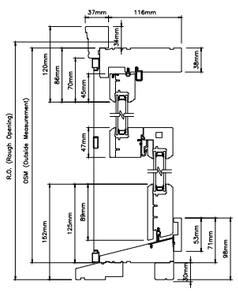

NON CLAD 25 SERIES DOUBLE HUNG (NON-TILTING)
with Standard 2" Brickmould
116 (4 $\frac{5}{8}$") JAMB

HEAD AND SILL DETAILS

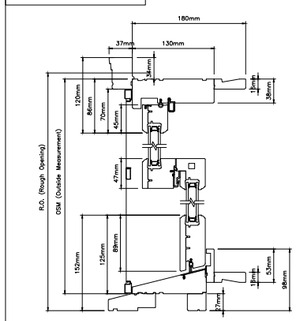

NON CLAD 25 SERIES DOUBLE HUNG (NON-TILTING)
with Flush 2" Brickmould
180 (7 $\frac{1}{8}$") JAMB with Extension

PLAN VIEW

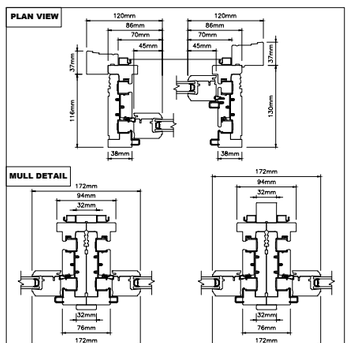

NON CLAD 25 SERIES DOUBLE HUNG (NON-TILTING)

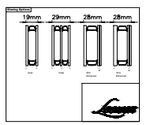

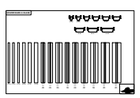

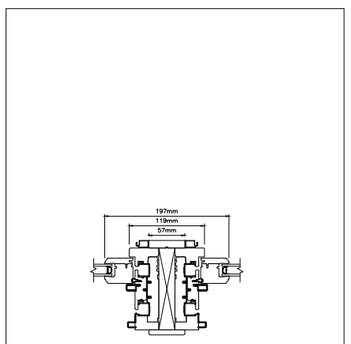

NON CLAD 25 SERIES DOUBLE HUNG (NON-TILTING)
1" Spreadmull

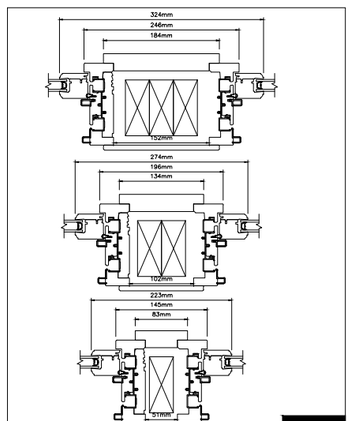

NON CLAD 25 SERIES DOUBLE HUNG (NON-TILTING)
Stud Pockets

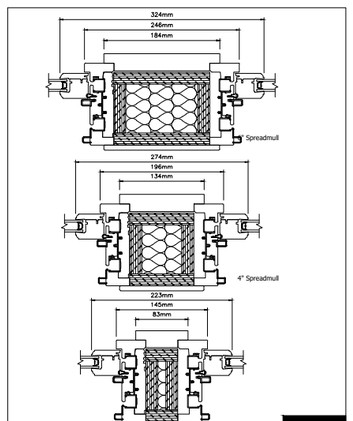

NON CLAD 25 SERIES DOUBLE HUNG (NON-TILTING)
Spreadmulls

CASING & SILL NOSE OPTIONS

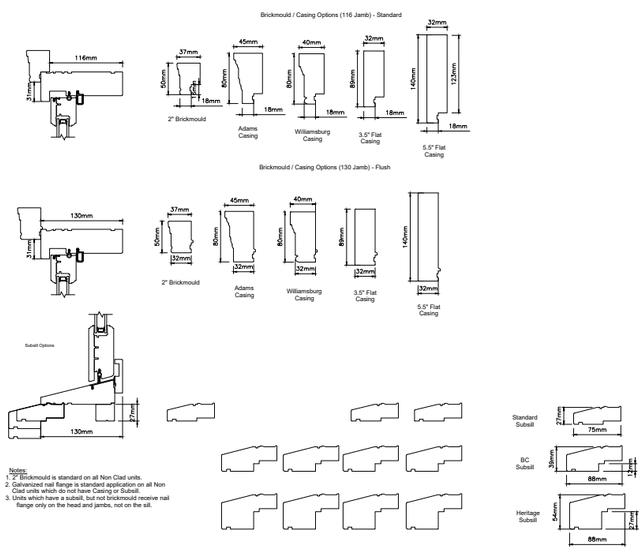

Notes:
1. 2" Brickmould is standard on all Non Clad units.
2. Galvanized nail flange is standard application on all Non Clad units which do not have Casing or Subsill.
3. Units which have a subsill, but not brickmould receive nail flange only on the head and jambs, not on the sill.

NON CLAD 25 SERIES DOUBLE/SINGLE HUNG LIBERTY (NON-TILTING)

GLAZING STOP & SDL OPTIONS

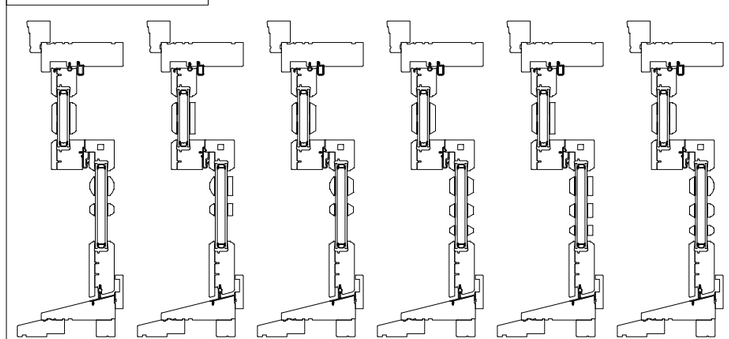

Ogee Exterior - Ogee Interior | Ogee Exterior - Square Interior | Ogee Exterior - Putty Interior | Putty Exterior - Putty Interior | Putty Exterior - Square Interior | Putty Exterior - Ogee Interior