1121_25Single-Hung-Non-Tilting-NC - Metric

HEAD AND SILL DETAILS

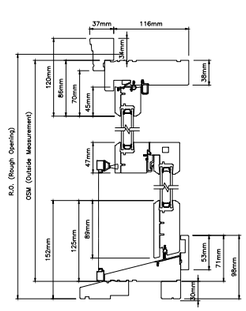

NON CLAD 25 SERIES SINGLE HUNG (NON-TILTING)
with Standard 2" Brickmould
116 (4 $\frac{9}{16}$") JAMB

HEAD AND SILL DETAILS

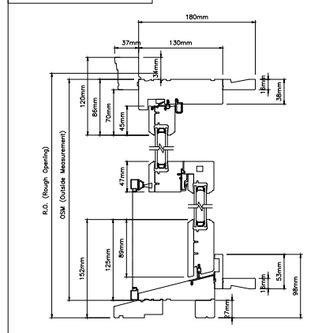

NON CLAD 25 SERIES SINGLE HUNG (NON-TILTING)
with Flush 2" Brickmould
180 (7 $\frac{1}{16}$") JAMB with Extension

PLAN VIEW

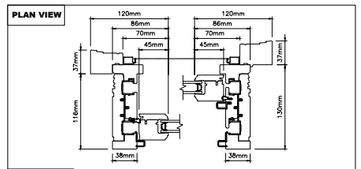

MULL DETAIL

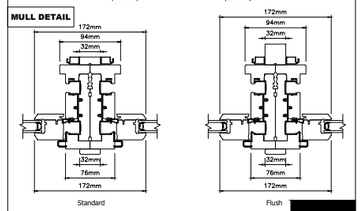

NON CLAD 25 SERIES SINGLE HUNG (NON-TILTING)

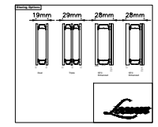

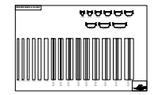

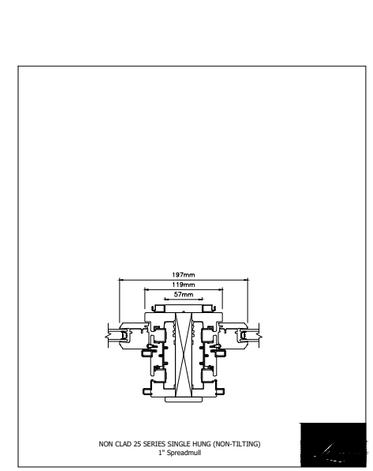

NON CLAD 25 SERIES SINGLE HUNG (NON-TILTING)
1" Spreadmull

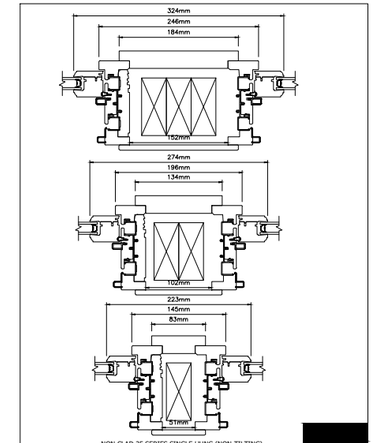

NON CLAD 25 SERIES SINGLE HUNG (NON-TILTING)
Stud Pockets

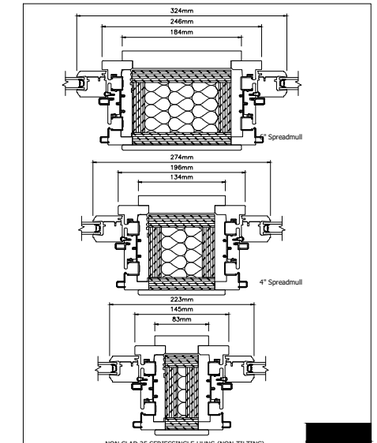

NON CLAD 25 SERIESSINGLE HUNG (NON-TILTING)
Spreadmulls

CASING & SILL NOSE OPTIONS

Brickmould / Casing Options (116 Jamb) - Standard

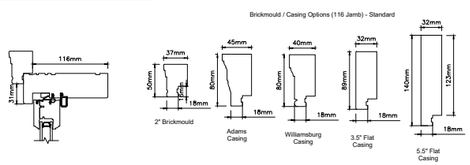

Brickmould / Casing Options (130 Jamb) - Flush

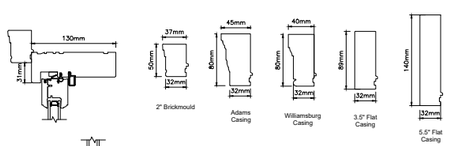

Subsill Options

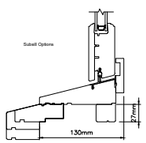

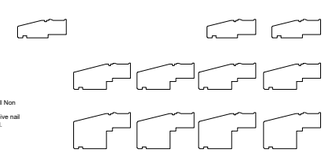

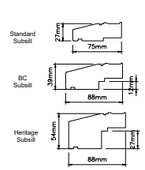

Notes:
1. 2" Brickmould is standard on all Non Clad units.
2. Galvanized nail flange is standard application on all Non Clad units which do not have Casing or Subsill.
3. Units which have a subsill, but not brickmould receive nail flange only on the head and jambs, not on the sill.

NON CLAD 25 SERIES DOUBLE/SINGLE HUNG LIBERTY (NON-TILTING)

GLAZING STOP & SDL OPTIONS

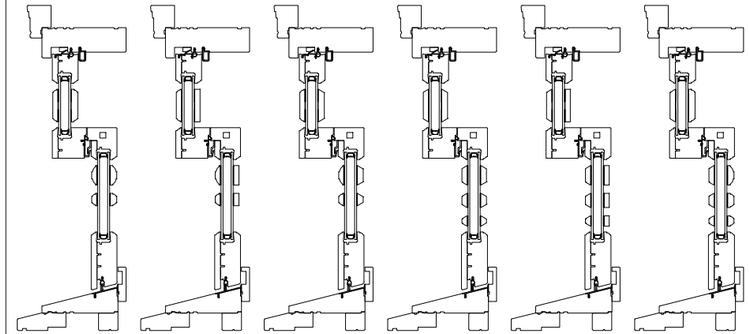

Ogee Exterior - Ogee Interior | Ogee Exterior - Square Interior | Ogee Exterior - Putty Interior | Putty Exterior - Putty Interior | Putty Exterior - Square Interior | Putty Exterior - Ogee Interior