1168_W-FP-M - Metric

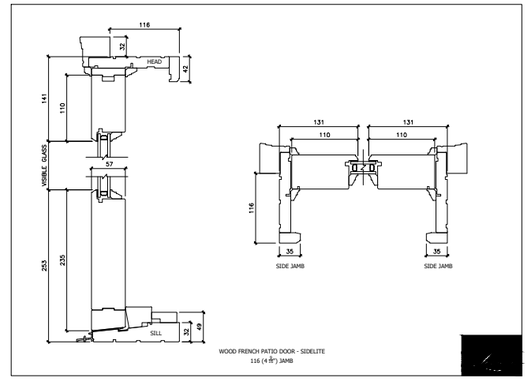

WOOD FRENCH PATIO DOOR - SIDELITE
116 (4 5/8") JAMB

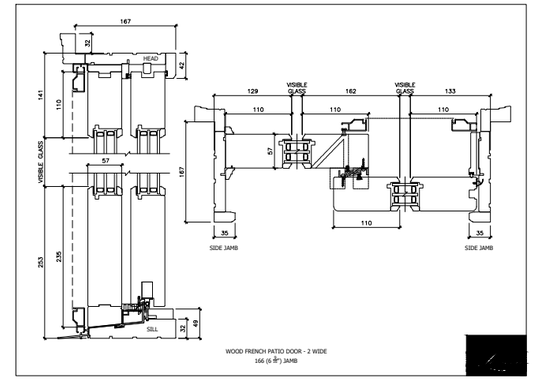

WOOD FRENCH PATIO DOOR - 2 WIDE
166 (6 5/8") JAMB

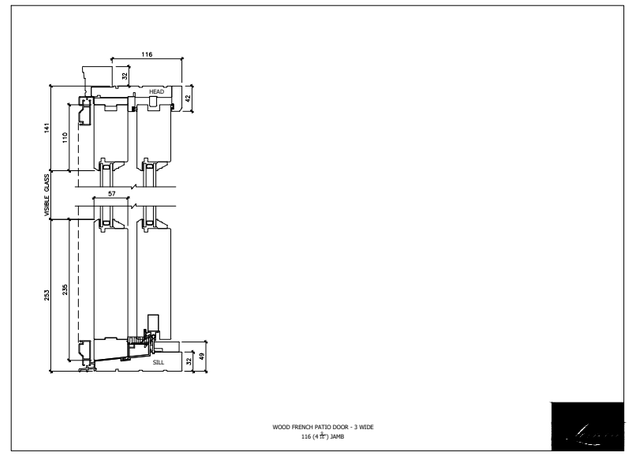

WOOD FRENCH PATIO DOOR - 3 WIDE
116 (4 5/8") JAMB

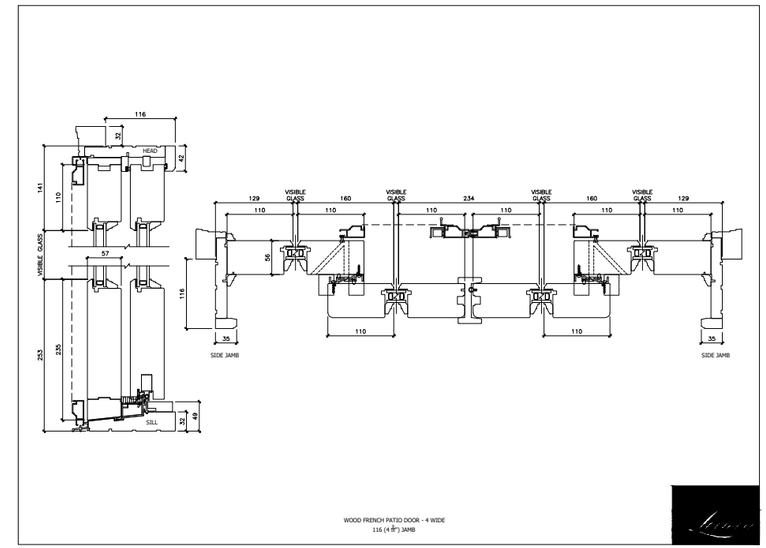

WOOD FRENCH PATIO DOOR - 4 WIDE
116 (4 5/8") JAMB

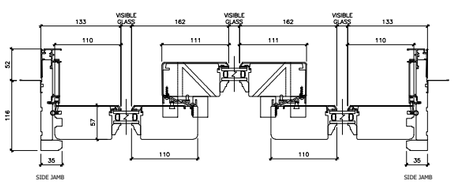

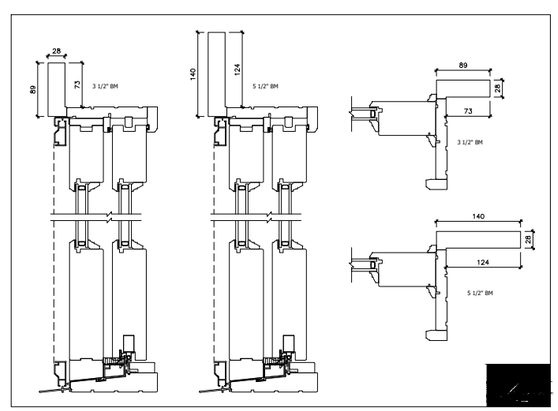

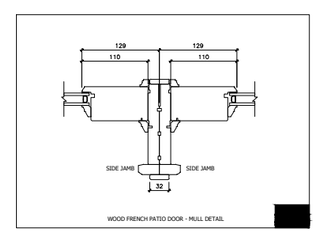

WOOD FRENCH PATIO DOOR - MULL DETAIL